Artize

ZAS-WHM-9001

SPECIFICATION DATA SHEET

PRODUCT DETAILS

Manufacturer :	Artize	**Type:**	Waste Coupling with ceramic cap
Colour:	White Matt	**Material:**	Brass /Fine Fire Clay

PRODUCT IMAGE

TECHNICAL DRAWING

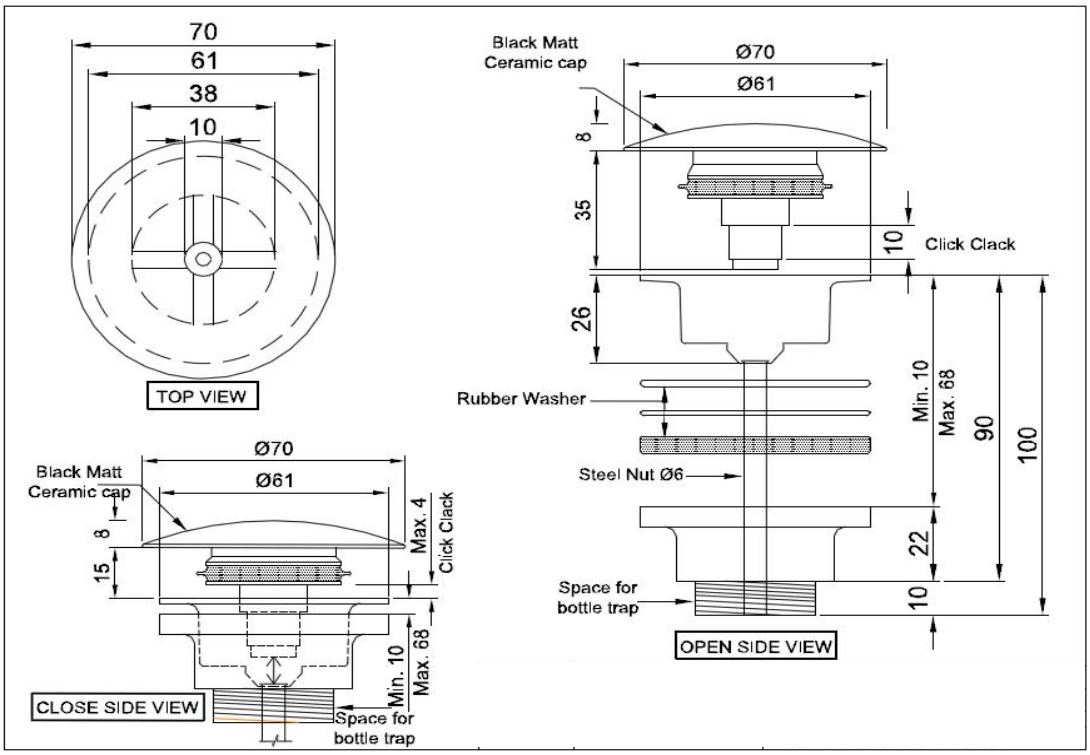

Product Dimension	70X70X90 mm Box Size 80X80X145mm	**FEATURES**	
Product Weight	350 gram	Click-Clack option,Colour Matching option, Ceramic Cap with Anti Germ Glaze	

COMPATIBLE WITH

Basin	ADS-WHM-64905, ADS-WHM-64907, ADS-WHM-64911

CERTIFICATION

Compliance : **EN 14688:2015 (E)**

CE

DISCLAIMER: Our every effort has been made to ensure factual accuracy, the information presented subject to changes due to requirements in different sites, markets and/ or countries. All dimensions are in mm (Tolerance ± 5 MM). Jaquar reserves the right to make the necessary amendments at any time without prior notice.